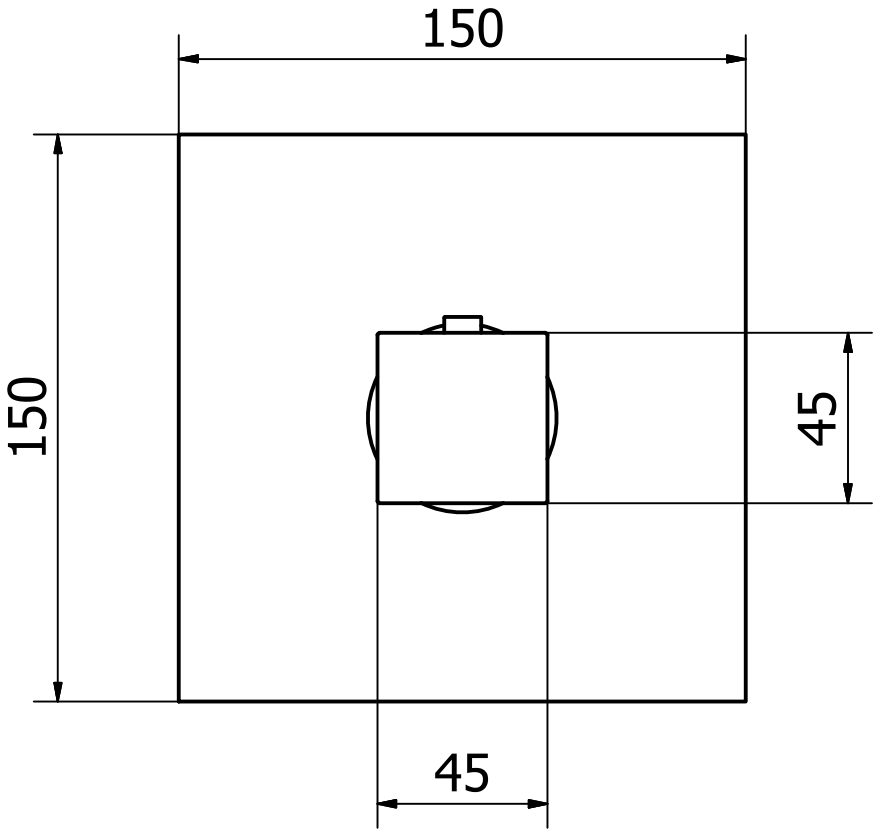
150
150
45
45

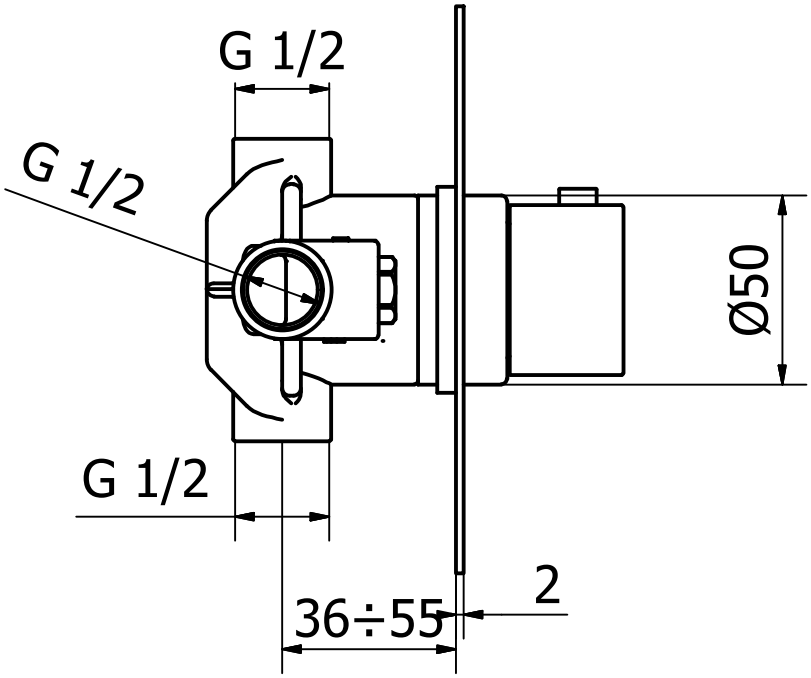
G 1/2
G 1/2
G 1/2
Ø50
2
36÷55