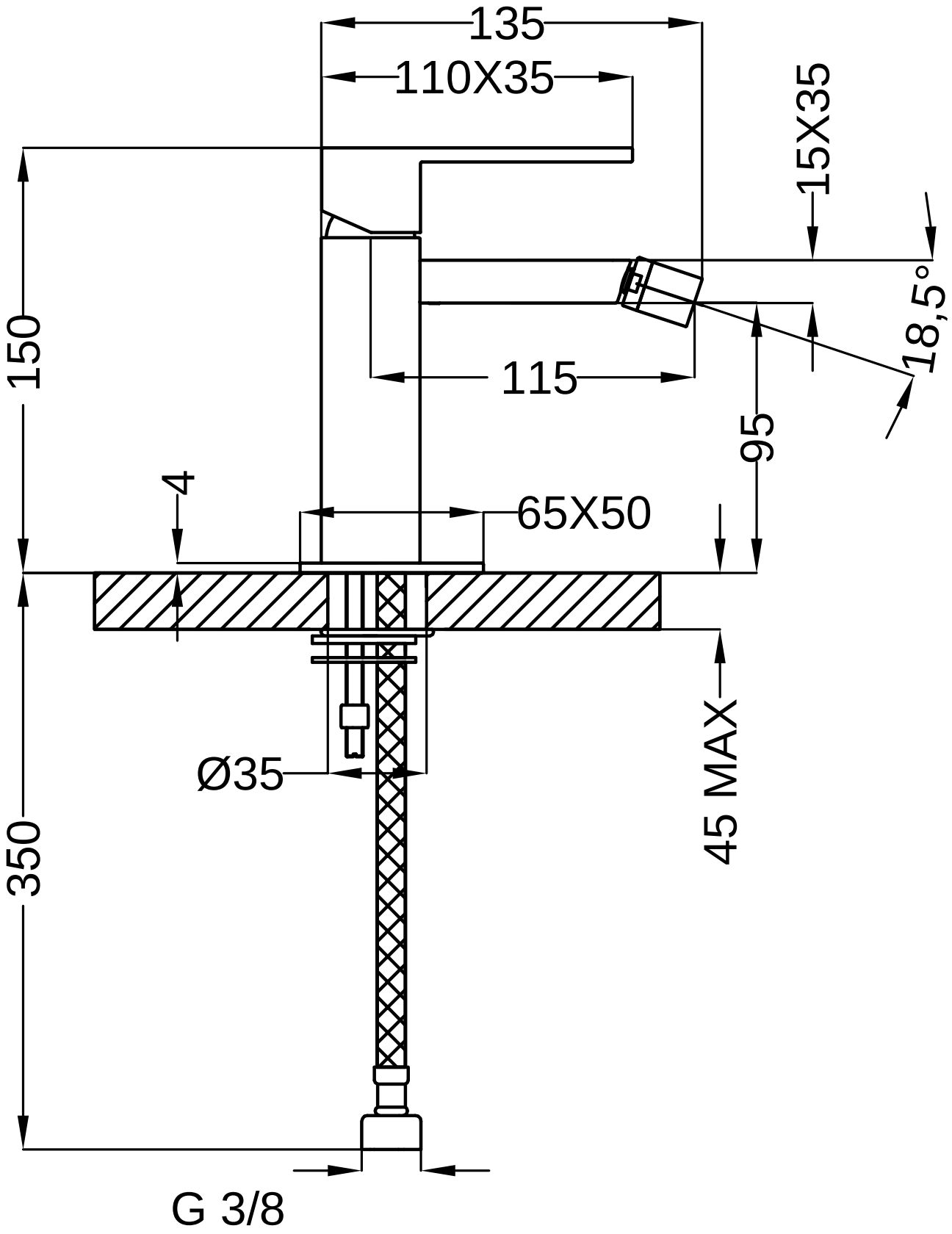
135
110X35
15X35
18,5°
150
115
95
4
65X50
45 MAX
Ø35
350
G 3/8